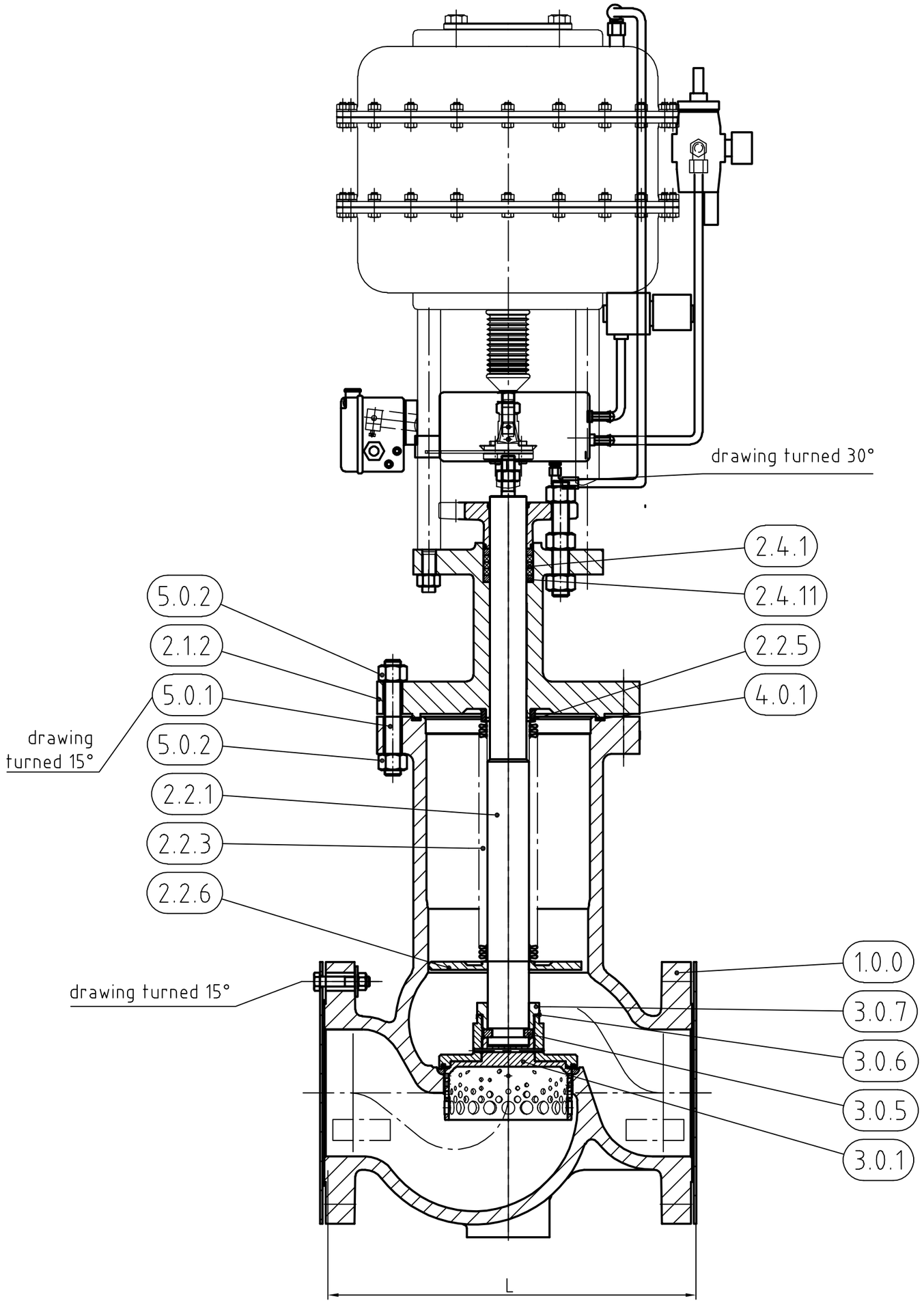

		Standard	alternative materials *	Standard *	alternative materials*	Standard *	alternative materials*
1.0.0	Body	1.6220/LCB/LCC Seat Stellite 21	LC1 LF2 Seat Stellite 21	1.4408/CF8M Seat Stellite 21	Hastelloy C276/2.4819 A995 Grade 4A/1.4470 CF3M 1.4404 1.4571 Seat hardfaced	1.0619/WCB/WCC Seat Stellite 21	1.0460 Seat Stellite 21
2.1.2	Bonnet	1.6220/LCB/LCC	1.0566 LC1 LF2	1.4408/CF8M	1.4401 Hastelloy C-276/2.4819 A995 Grade 4A/1.4470 CF3M 1.4404 1.4571	1.0619/WCB/WCC	1.0460
2.2.1	Stem lower part	1.4571	2.4819	1.4571	2.4819	1.4571	2.4819
2.2.3	Bellows	2.4819	1.4571 2.4856	2.4819	1.4571 2.4856	2.4819	1.4571 2.4856
2.2.5 2.2.6	Bellows Connection Parts	2.4819	1.4571	2.4819	1.4571	2.4819	1.4571
2.4.1 (2.4.11)	Gland Packing	PTFE	Graphit	PTFE	Graphit	PTFE	Graphit
3.0.1 3.0.5 3.0.6 3.0.7	Plug	1.4571 soft sealing	1.6220 (1.0566) 2.4819 all plugs are hardfaced available	1.4571 soft sealing	1.6220 (1.0566) 2.4819 all plugs are hardfaced available	1.0460 soft sealing	2.4819 1.4571 all plugs are hardfaced available
4.0.1	Gasket	1.4571/PTFE	2.4819/PTFE 1.4571/Graphit 2.4819/Graphit	1.4571/PTFE	1.4571/Graphit	1.4571/PTFE	1.4571/Graphit
5.0.1	Stud Bolts	A 320 Grade L7M - OC	DIN976 1.7225 GC OC A 193 Grade B7 - OC DIN 976 A4 - 70	A 320 Grade L7M - OC	DIN976 1.7225 GC OC A 193 Grade B7 - OC DIN 976 A4 - 70	A 320 Grade L7M - OC	DIN976 1.7225 GC OC A 193 Grade B7 - OC DIN 976 A4 - 70
5.0.2	Nuts	A 194 Grade 7 - OC A 194 Grade 7M - OC	EN ISO 4032 1.7218/KG OC A 194 Grade 2 H - OC DIN 934 A4 - 70	A 194 Grade 7 - OC A 194 Grade 7M - OC	EN ISO 4032 1.7218/KG OC A 194 Grade 2 H - OC DIN 934 A4 - 70	A 194 Grade 7 - OC A 194 Grade 7M - OC	EN ISO 4032 1.7218/KG OC A 194 Grade 2 H - OC DIN 934 A4 - 70

* alternative materials of construction not covered by GEST 17/492

Alternative with screw-in seat

without scale

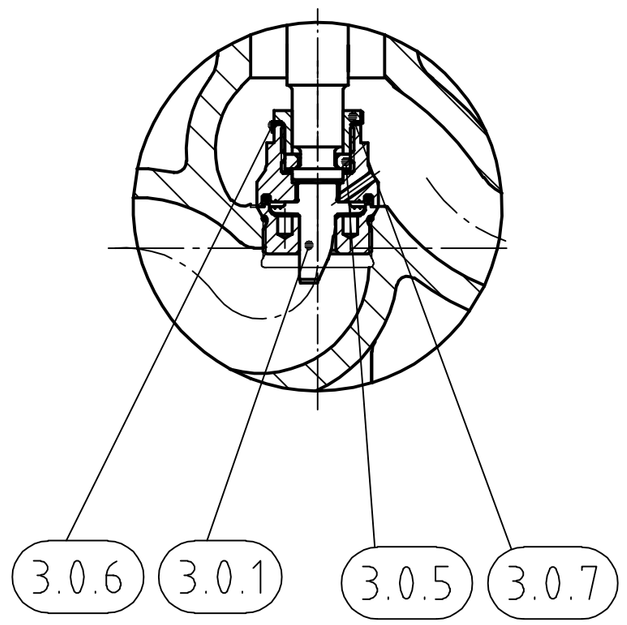

Applicable Standards und Specifications	
WTA Specifications:	Q71 (QSV130) as per GEST 17/492 Q81 (QSV130) as per GEST 17/492
BSG-Valve PN16/40	
Face to Face:	EN 558 - FTF 1
Flanges:	EN 1092-1
BSG-Valve-GVF Class 300	
Rating:	ASME B16.34 Class 300
Face to Face:	ASME B16.10 Table 2 Col. 15
Flanges:	ASME B16.5 Class 300
BSG-Valve-BVF Class 300	
Rating:	ASME B16.34 Class 300
Face to Face:	ASME B16.10 Table 2 Col. 7 and 8
Flanges:	ASME B16.5 Class 300
BSG-Valve-GVF Class 150	
Rating:	ASME B16.34 Class 150
Face to Face:	ASME B16.10 Table 1 Col. 15
Flanges:	ASME B16.5 Class 150
BSG-Valve-BVF Class 150	
Rating:	ASME B16.34 Class 150
Face to Face:	ASME B16.10 Table 1 Col. 18
Flanges:	ASME B16.5 Class 150

BSG-VALVE PN 16/40	
Size *	Length L
DN15	130
DN20	150
DN25	160
DN40	200
DN50	230
DN80	310
DN100	350
DN125	400
DN150	480
DN200	600
DN250	730
DN300	850
DN350	980
DN400	1100

BSG-VALVE-GVF Class 300	
Size*	Length L
1/2"	152
3/4"	178
1"	203
1,5"	229
2"	267
3"	318
4"	356
5"	400
6"	444
8"	559
10"	622
12"	711
14"	980
16"	1100

BSG-VALVE-BVF Class 300	
Size*	Length L
1/2"	140
3/4"	152
1"	165
1,5"	190
2"	216
3"	282
4"	305
6"	403

BSG-VALVE-GVF Class 150	
Size *	Length L
1/2"	152
3/4"	178
1"	127
1,5"	165
2"	203
3"	241
4"	292
5"	356
6"	406
8"	495
10"	622
12"	698

* DN25-DN150/1"-6" Approved under GEST 17/492

Index	Änderung/Revision	Datum	Name
03	Changed from 06/318 to GEST 17/492	12.03.2021	VNell
02	Table Class150 BVF deleted, other tables revised	20.02.2020	VNell
01	Drawing revised	25.10.2017	VNell

Bellows Sealed Globe Valve
EC11.35 G-FL DN15 - DN400 PN16/40 -RK
EC11.35 G-FL 1/2" - 16" Class 300 GVF/BVF and Class 150 GVF -RK

Sealing surface inlet: EN 1092/ASME B16.5
Sealing surface outlet: EN 1092/ASME B16.5

W.T.A / XOMOX
Von-Behring Str.15
88131 Lindau

	Date	Name
Signed:	14.09.2017	VNell
Checked:	14.09.2017	HVeiller
Customer:		
Order-number:		
Drawing-number:		Scale:
85729 Rev. 03		1:5

All rights reserved acc. to DIN 34

Satisfy the pressure equipment directive 97/23/EG up to category III, module H.