1st ANGLE PROJECTION

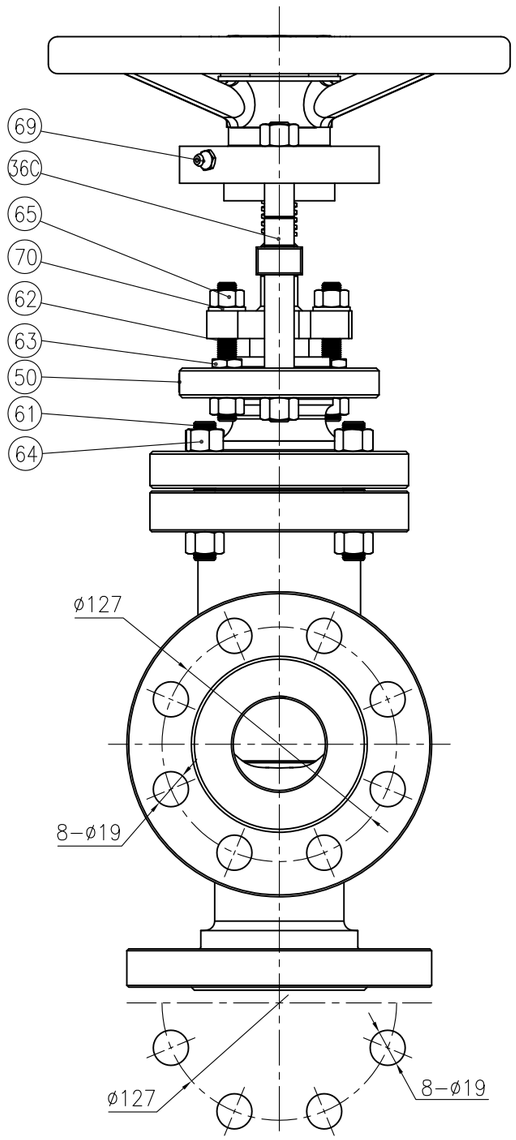

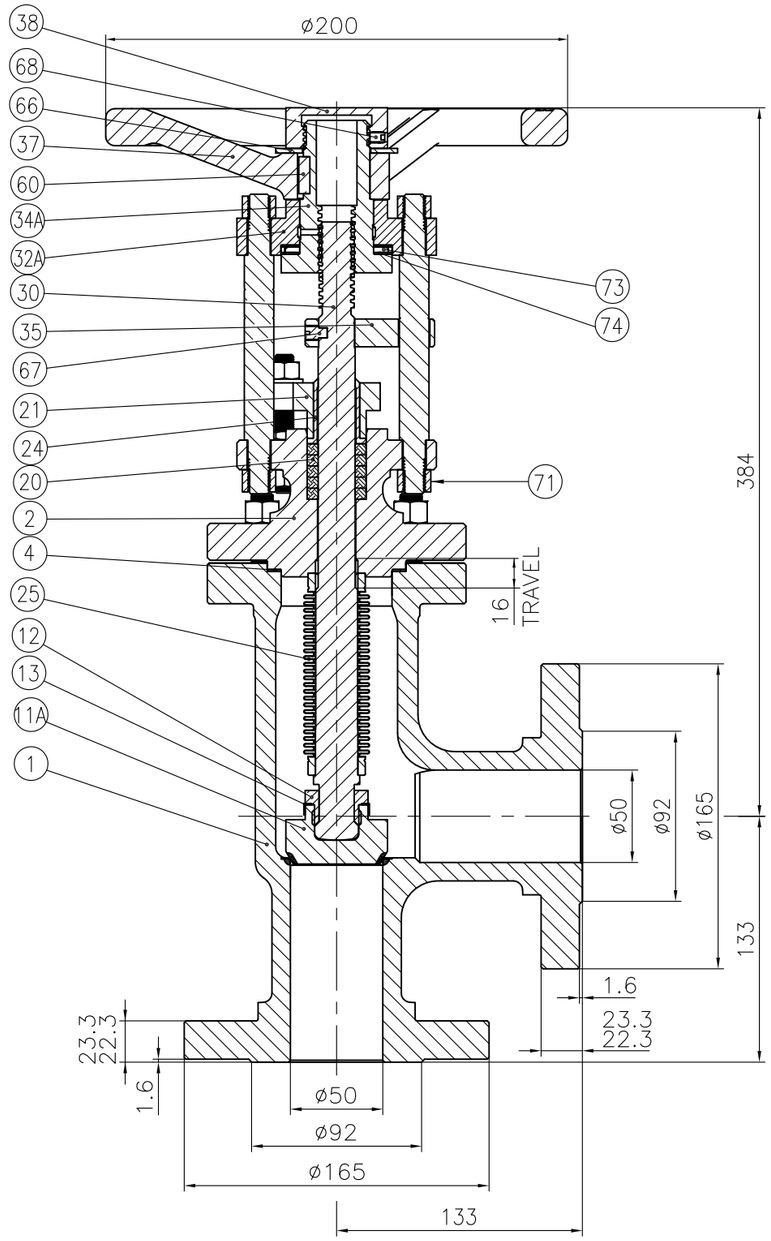

REF	DESCRIPTION	MATERIAL
1	BODY	ASTM A352 LCC+STELLITE 21
2	BONNET	ASTM A350 LF2
4	BODY/BONNET GASKET	GYLON 3510
11A	DISC	316Ti(1.4571)+STELLITE 6
12	DISC NUT	UNS S43100
13	DISC LOCK WASHER	TYPE 316
20	PACKING RING	PURE PTFE
21	PACKING GLAND	ASTM A351 CF8M
24	GLAND SCRAPER BUSH	PTFE
25	BELLOWS	UNS N10276(2.4819)
30	STEM	UNS S31803
32A	YOKE FLANGE	CS AISI 1035
34A	YOKE SLEEVE	A439 GRADE D2
35	ANTI ROTATION BRIDGE	CS AISI 1035
36C	PILLAR	CS AISI 1035
37	HANDWHEEL	SG IRON BS.EN 1563 EN-GJS-420-12
38	HANDWHEEL LOCKNUT	CS AISI 1035
60	KEY	CS AISI 1025
61	STUD	A320 L7M XYLAN 1424
62	STUD	A320 L7M XYLAN 1424
63	LOCK NUT	A4-70
64	NUT	A320 L7M XYLAN 1424
65	NUT	A320 L7M XYLAN 1424
66	WASHER	CS AISI 1020
67	DOG POINT SCREW	TYPE 316
68	SET SCREW	TYPE 316
69	LUBRICATOR	A570 GR.A
70	WASHER	SS 316
71	NUT NYLOCK	CS AISI 1035 NYLOCK
50	NAME PLATE	TYPE 316
73	NEEDLE ROLLER THRUST BEARING	
74	THRUST WASHER	

Notes:

1. Designed and manufactured in accordance with Euro Chlor GEST 17/492 Globe Valves Bellow Sealed for Use on Liquid Chlorine. Also conforms to the requirements of The Chlorine Institute's Pamphlet 6–latest edition.
2. Integral weld deposited seat Stellite 21 minimum hardness value HB300 (HRC32 equivalent).
3. Applicable Inspection and Test plan ITP HMVBS17492.
4. Each valve dried in an oven at a minimum of 120°C for at least 3 hours and fitted with gaskets and metal blanking flanges, which have a silica gel satchet attached to their inner face.
5. All lubricants used are chlorine compatible chlorofluorinated.
6. Fitted with stainless steel Tag "CLEANED FOR CHLORINE SERVICE".
7. Valve to be CE marked. Declaration of Conformity HMV_CE_002.

Weight: 31kg

MAX INTERNAL RADII 0.5 EXCEPT AS STATED
MACHINING TOLERANCES UNLESS OTHERWISE STATED

to3	3 to6	6 to10	10 to18	18 to30	30 to50	50 to80
±0.07	±0.09	±0.11	±0.14	±0.17	±0.20	±0.23

80 to120	120 to180	180 to250	250 to315	315 to400	400 to500	500 to630
±0.27	±0.32	±0.36	±0.41	±0.45	±0.49	±0.55

SURFACE ROUGHNESS √ EXCEPT WHERE OTHERWISE STATED

AS PRODUCED BY COMMON PRODUCTION PROCESSES
12.5/ ROUGH TURN
6.3/ 3.2/ TURNING OR MILLING
0.8/ FINE TURNING

DO NOT SCALE DRAWING.
ALL DIMENSIONS IN MILLIMETRES(mm)/
UNLESS OTHERWISE STATED.
REMOVE ALL BURRS AND SHARP EDGES.
FOR EXPLANATION OF NOTES, SYMBOLS ETC, SEE BS 308.

DRAWN	DATE	APPROVED	SCALE
LiuBo	2021.04.19	Ludovic	1:2

HUNT & MITTON VALVE COMPANY

VALVE CODE
8901 SERIES

TITLE
G.A.:DN50(2") CAST STEEL
ANGLE GLOBE VALVE BELLOWS SEAL
FOR USE ON CHLORINE
FLANGED ASME CL300 RF

DRG. No. SHEET OF
DN50_8901_CL300RF_32_LCC_C276_31803_EC REV 0